HAL open science

Effects of pulsed gliding arc plasma on non-premixed CH 4 /CO 2 -Air flame stability

Ahlem Ghabi, Thibault Darny, Sébastien Dozias, Eric Robert, Pablo Escot-Bocanegra, Toufik Boushaki

To cite this version:

Ahlem Ghabi, Thibault Darny, Sébastien Dozias, Eric Robert, Pablo Escot-Bocanegra, et al.. Effects of pulsed gliding arc plasma on non-premixed CH 4 /CO 2 -Air flame stability. The 13th European Conference on Industrial Furnaces and Boilers, Apr 2022, Albufeira, Portugal. hal-04039399

HAL Id: hal-04039399

https://cnrs.hal.science/hal-04039399v1

Submitted on 21 Mar 2023

HAL is a multi-disciplinary open access archive for the deposit and dissemination of scientific research documents, whether they are published or not. The documents may come from teaching and research institutions in France or abroad, or from public or private research centers.

L'archive ouverte pluridisciplinaire **HAL**, est destinée au dépôt et à la diffusion de documents scientifiques de niveau recherche, publiés ou non, émanant des établissements d'enseignement et de recherche français ou étrangers, des laboratoires publics ou privés.

Effects of pulsed gliding arc plasma on non-premixed CH_4/CO_2-Air flame stability

A. Ghabi*[1,2], T. Darny[1,2], S. Dozias[2], E. Robert[2], P. Escot Bocanegra[2], T. Boushaki[1]
[1]ICARE, UPR3021, CNRS, 1C Avenue de la Recherche Scientifique, 45071 Orléans, France
[2]GREMI, UMR7344, CNRS/University of Orleans, 14 rue d'Issoudun, 45067 Orléans, France
*ahlem.ghabi@cnrs-orleans.fr

Introduction

Investigation of flame characteristics:

- Effects of CO_2 addition to the fuel on flame stability and pollutant emissions.

Study of pulsed gliding arc plasma (PGA) assisted combustion:

- Impact of PGA plasma on the characteristics of non-premixed CH_4/CO_2-Air flames in a coaxial swirl burner.

Experimental setup

OH* chemiluminescence technique

- **Apparatus** : ICCD camera, a 105 mm UV lens, a 325±55nm band-pass filter, an acquisition card with a computer.
- **Visualization of flame front** : stability, lift-off heights and flame lengths.

Measurements and analysis of flue gases

- Concentrations of NO_x, CO, CO_2, O_2 and SO_2 in flue gases are measured.
- HORIBA PG250 multi-gas analyzer.

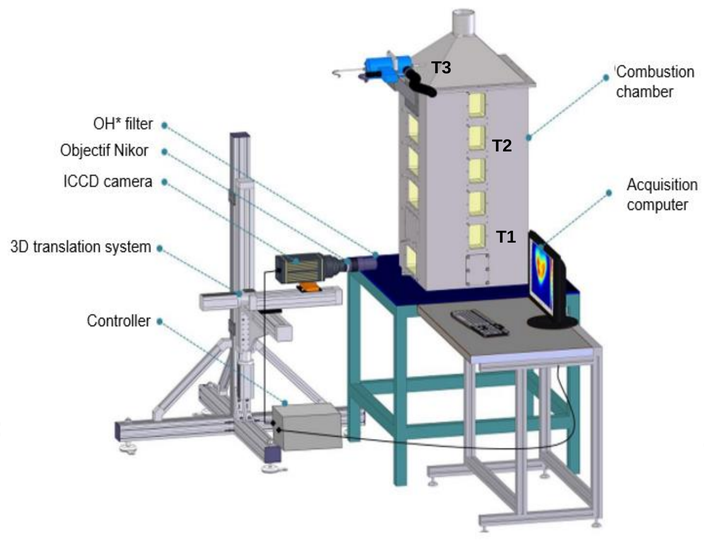

Coaxial swirl burner

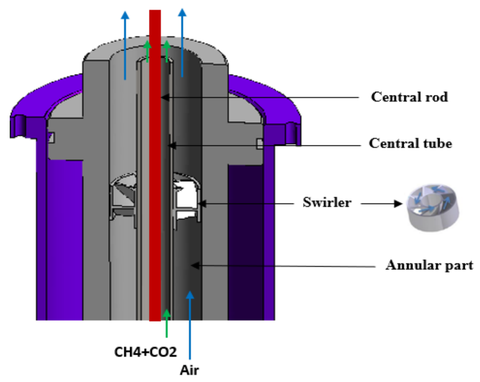

- 2 concentric tubes with a swirler in the annular part and a central metal rod used as a cathode for the plasma.

Plasma configuration

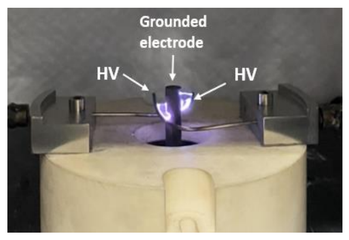

- The PGA plasma is generated between the grounded center rod of the burner (cathode), and two other high voltage (HV) electrodes symmetrically placed around the central rod.

Results

Lift-off height and flame length = f (%CO_2)

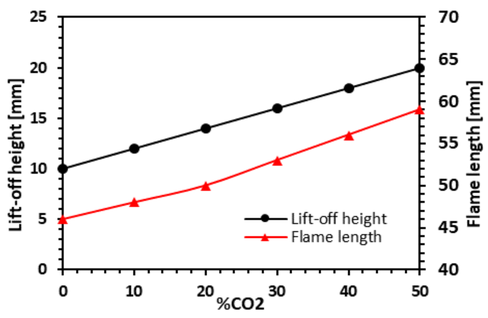

Average images of OH* chemiluminescence

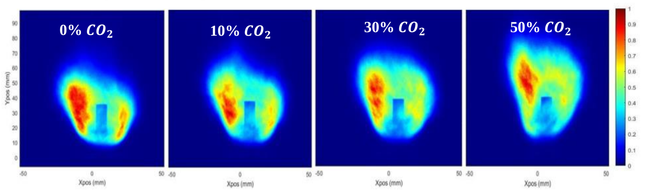

Direct photographs of flame, ϕ=0.4, Sn=0.8

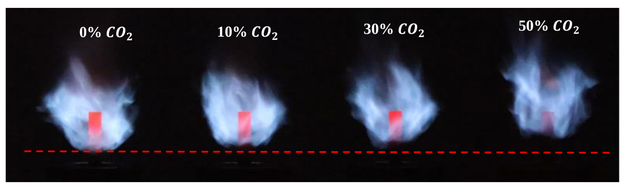

- L_f ↗ with the addition of CO_2 to the fuel due to the decrease of flame burning velocity and flame temperature which disadvantages the flame stabilization.

NO_x and CO emissions = f (% CO_2); (b) Flue gases temperature (at 3 different positions in the combustion chamber) = f (%CO_2)

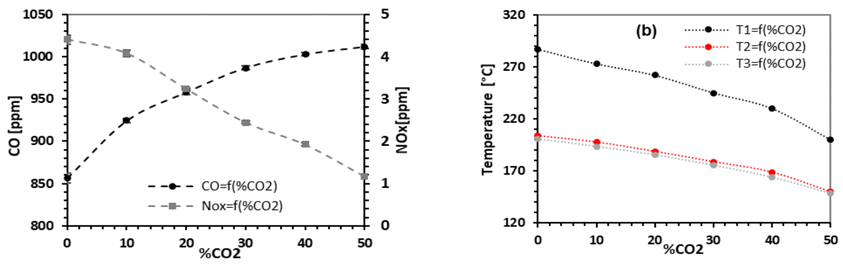

- Increasing 50% of CO_2 in the fuel increases CO to 18% in flue gases ⟶ Due to thermal dissociation of CO_2 in the high-temperature regions of the flame.
- Low concentration of NO_x in both cases without and with addition of CO_2.

Temporal evolution of the HV pulse without and with plasma activation

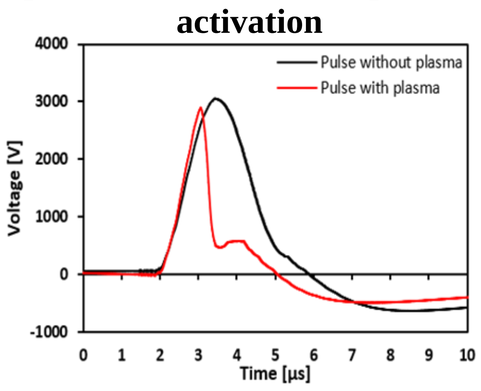

- Pulse frequency fixed at 10kHz, for both HV electrodes.
- The applied voltage is measured at between 3 and 3,5kV ± 350V at the different operational conditions.

Direct photographs of the flame in the case of plasma-OFF and plasma-ON (f=10kHz) = f(%CO_2), ϕ=0.4, Sn=0.8

- With the presence of PGA plasma, the lift-off height decreases, by nearly a half time the initial one without plasma.

Conclusion

- The addition of CO_2 to the fuel leads to an increase of CO and a slight decrease of NOx, with a reduction of combustion gases temperature.
- PGA plasma plays a role to stabilize the flame, the lift-off heights of the flames decrease with the presence of PGA plasma (due to the N_2* production).
- PGA plasma decreases CO (about 3%) production.

Effect of PGA plasma on (a) NO_x and CO emissions; (b) Combustion gas temperature (T1) with plasma-OFF and plasma-ON

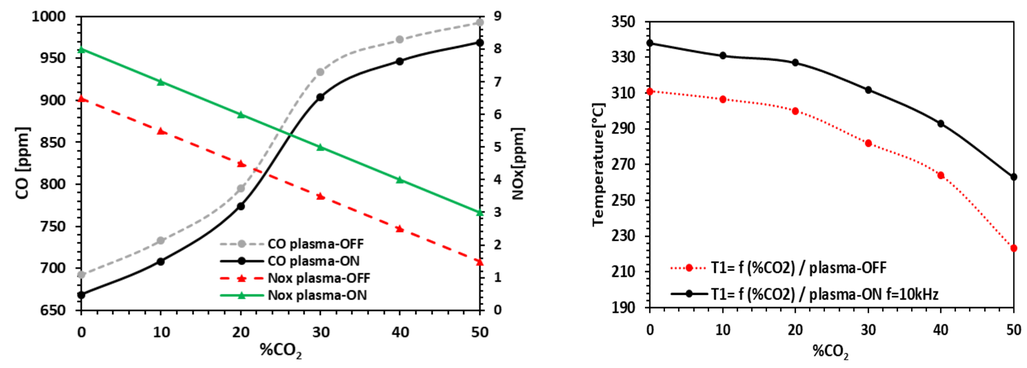

- Same trend followed by the pollutant emissions (CO and NO_x) and the temperature T1 in both cases plasma-OFF and plasma-ON.
- Addition of 50% of CO_2 to the fuel decreases the temperature T1 by 22% ⟶ Due to thermal and radiative properties of CO_2.
- Plasma activation (at f=10kHz) increases the temperature T1 by nearly 12%.
- Slight decrease of CO emissions with plasma ⟶ The enhance in conversion of CO to CO_2 with plasma.
- Low concentration of NO_x that remains almost same in both cases plasma-ON and Plasma-OFF.

Emission spectra of (a.) CH_4-Air and CH_4/CO_2-Air flames and (b.) plasma-flames. The integration time is 2 s in (a.) and 0.4 s in (b.)

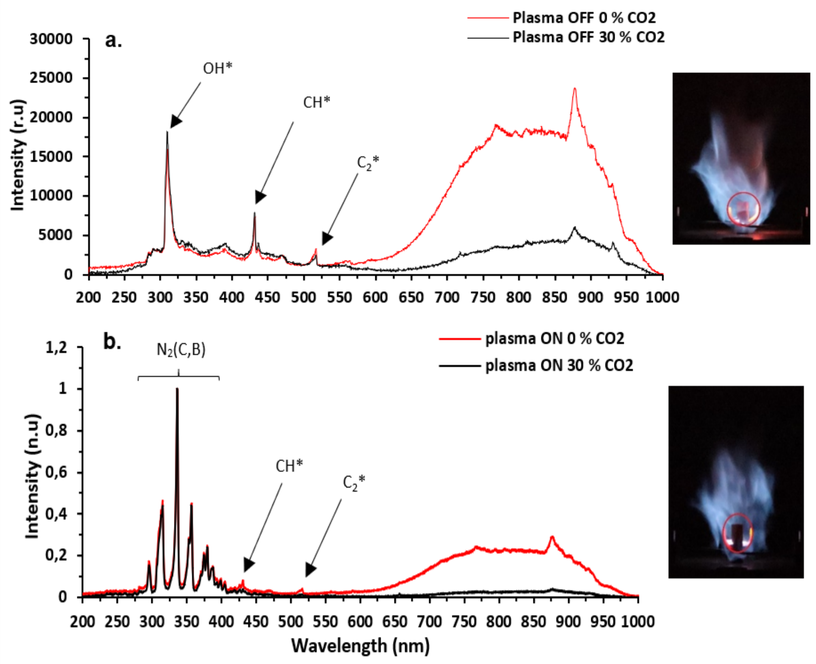

Plasma-OFF

- More intense OH* (308,9 nm) and CH (431,3 nm) emissions with CO_2 addition.

Plasma-ON

- OH* convoluted with the band structure of N_2(1,0) emission at 315,9 nm.
- O (dissociation of O_2 with the excited N_2) is hided by the continuum of emission.

Emission spectra of a CH_4-Air flame with and without plasma

- Decrease of CH* emission with plasma activation ⟶ Due to the important role of OH* and O (produced by plasma) in the breaking of C-H bond.

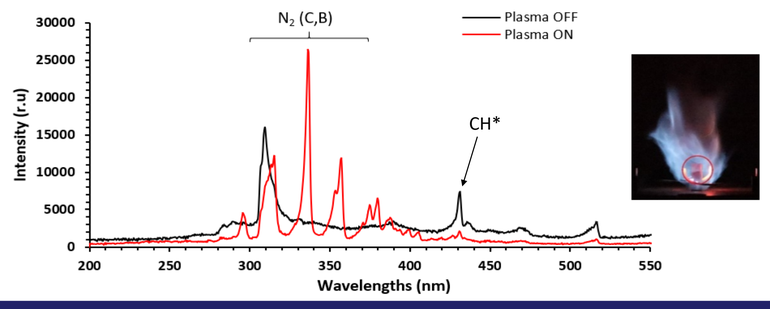

Acknowledgements

The authors are grateful for the financial support of this work provided by the ANR (LABEX CAPRYSSES project) and the Centre Val de Loire Region (CAPRI project).